A B&B ELECTRONICS Company

User module

Modem Bonding

APPLICATION NOTE

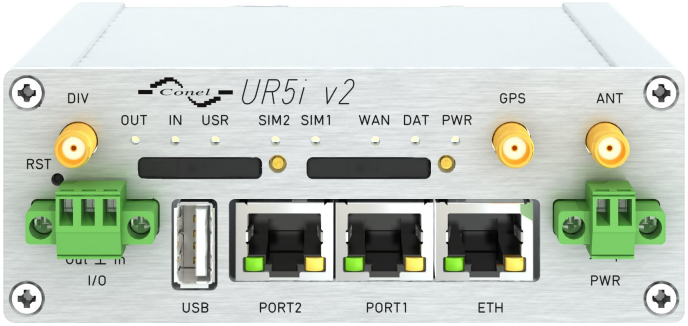

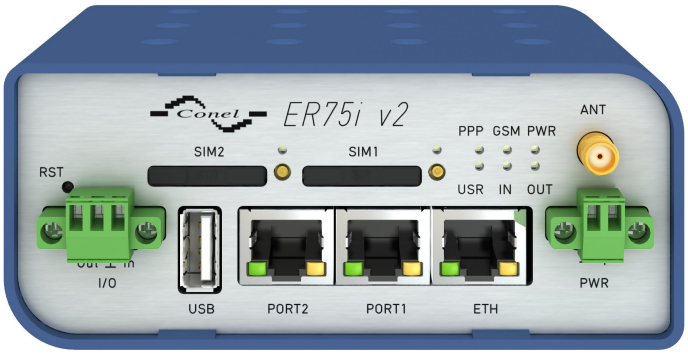

Used symbols

Danger – important notice, which may have an influence on the user's safety or the function of the device.

Attention – notice on possible problems, which can arise in specific cases.

Information, notice – information, which contains useful advice or special interest.

GPL license

Source codes under GPL license are available free of charge by sending an email to:

info@conel.cz.

Conel s.r.o., Sokolska 71, 562 04 Usti nad Orlici, Czech Republic
Manual issued in CZ, July 19, 2013

Contents

1 Description of user module **1**

2 Configuration **2**

2.1 Configuration of the master router 3
2.2 Configuration of the slave router 4

3 Testing **5**

4 Troubleshooting **7**

5 Recommended literature **8**

List of Figures

1 Wiring diagram 1
2 Configuration form 2
3 Network 5
4 Monitoring 6

List of Tables

1 Description of items in configuration form 2

1. Description of user module

User module Modem Bonding is not contained in the standard router firmware. Uploading of this user module is described in the Configuration manual (see [1]).

This user module allows you to induce a communication model between several Conel routers (max. 20) in which the bonded connectivity of all routers in the chain is available on one router (master). The first device (router) in the chain has the role of master and bonded connectivity is available on its ETH port. Following routers are slaves. Master and slaves are wired together from PORT1 to ETH, so that the last Slave has only ETH connected.

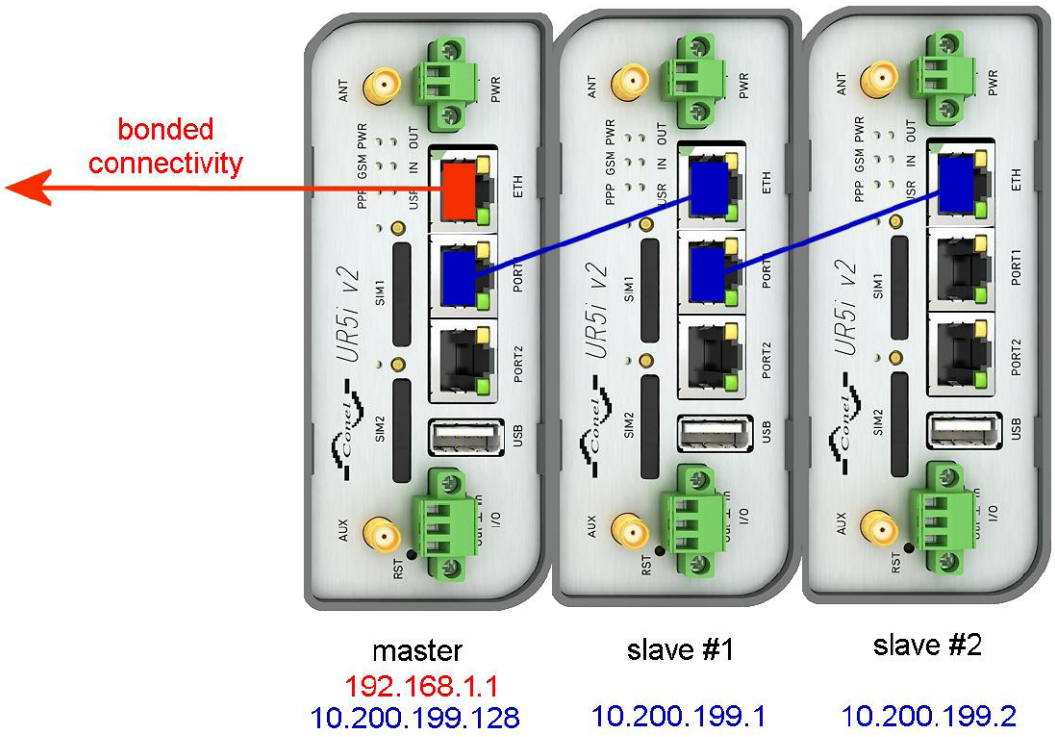

Figure 1: Wiring diagram

For configuration of each router is available web interface of user module, which is invoked by clicking on the module name on the *User modules* page of the router web interface. The left part of the Modem Bonding web interface contains the menu with pages for monitoring (*Status*), *Configuration* and *Customization* of the router. Customization block contains only the *Return* item, which switches this web interface to the interface of the router.

2. Configuration

Configuration of all routers (master and slaves) is performed via the form on the *Settings* in the *Configuration* part of the user module web interface. The first item in this form – *Enable modem bonding* – is used to activate the Modem Bonding user module. Other items have the following meanings:

Item	Description
Mode	Defines which role in modem bonding router has – master or slave
Slave ID	Unique number of a particular slave between all slaves. It is grayed out for master.
Slaves	Specifies the number of slave routers that are part of the chain
Info Server IP	IP address of bonding server. **(Don't use DNS name!)**.
Username	Username for authentication
Password	Password for authentication
Interfaces	The communication interface (used only for UCR11 v2 routers)

Table 1: Description of items in configuration form

The last device in the chain can be connected a different router than the router of Conel company. Then it is necessary to check the *Modem without Bonding feature is connected at the end of chain...* box and set IP address 10.200.199.100 for this router.

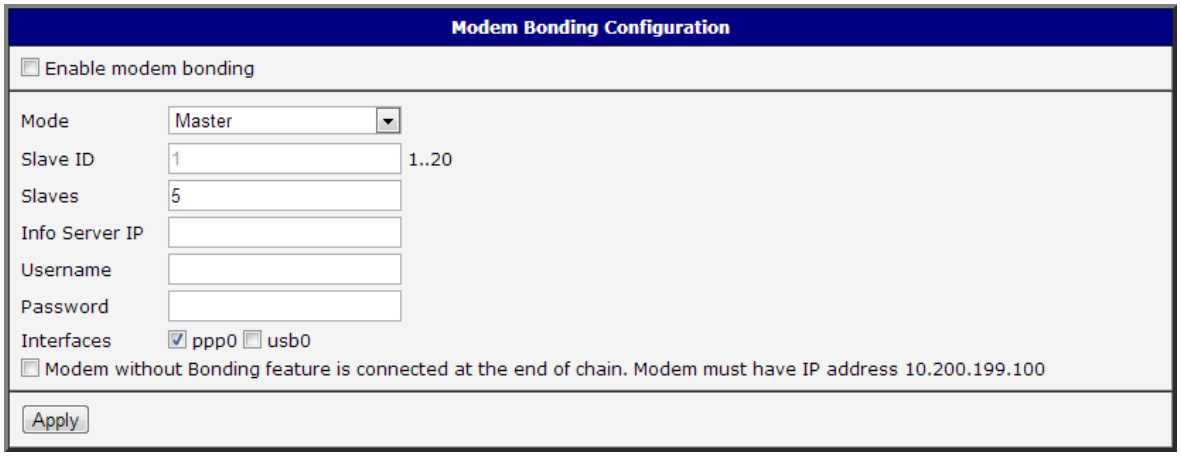

Figure 2: Configuration form

2.1 Configuration of the master router

Configure the master router as usually for connecting to your mobile network (APN, username, password, . . .). The LAN settings are also on your decision (DHCP, IP range). Do not enable or configure *Secondary LAN* in the web interface of the router (*LAN* item). If the master is working (internet connectivity is OK on computer behind it), it is possible to configure the Modem Bonding module.

1. Check the *Enable modem bonding* box.
2. The *Mode* item set to *Master*.
3. *Slave ID* is grayed out, because you are configuring master.
4. Enter the number of slaves which are part of the chain to the *Slaves* textbox. If you have e.g. four modems in total, (1 × master + 3 × slave), write number 3.
5. The *Info Server IP* item will contain the IP address of the bonding server.
6. Enter authentication information of the router to the *Username* and *Password* items.

When the master router starts modem bonding, it redirects default route to the newly created bonding tunnel. Also DNS servers of your mobile operator are replaced with Google ones (8.8.8.8 and 8.8.4.4) which are accessible from the internet. When the PPP connection is for some reasons dropped and then restored, all these changes are replaced by a fresh start of PPP. You have to create a script to revert these changes. Enter the following lines to the *Up Script* field on the *Up/Down script* page of the router web interface and confirm with *Apply*.

```
#!/bin/sh
#
# This script will be executed when PPP/WAN connection is established.

route del default
route add default debond0
echo "nameserver 8.8.8.8" > /etc/resolv.conf
echo "nameserver 8.8.4.4" >> /etc/resolv.conf
```

2.2 Configuration of the slave router

Configure the slave as usually for connecting to your mobile network (APN, username, password, ...). The LAN settings is also on your decision (DHCP, IP range), but keeping the default settings (192.168.1.1 and DHCP) is recommended. Do not enable or configure *Secondary LAN* in the web interface of the router (*LAN* item). If the slave is working (internet connectivity is OK on computer behind it), it is possible to configure the Modem Bonding module.

1. Check the *Enable modem bonding* box.
2. The *Mode* item set to *Slave*.
3. Enter a unique identifier of the slave router to the *Slave ID* textbox – number in the range from one to twenty
4. The remaining items are grayed out

Each slave obtains a new IP address 10.200.199.X (where X is its *Slave ID*) for both Ethernet ports (bridged), when modem bonding is active, but the old IP address (typically 192.168.1.1) is still available on ETH port (you can use it for later changes in webadmin).

3. Testing

You can see a new interface *debond0* on the *Network* page in the *Interfaces* section of the router web interface. Default route in the *Route Table* section will be pointed to this interface. On the *System Log* page will be displayed lines starting with *loadbalance*.

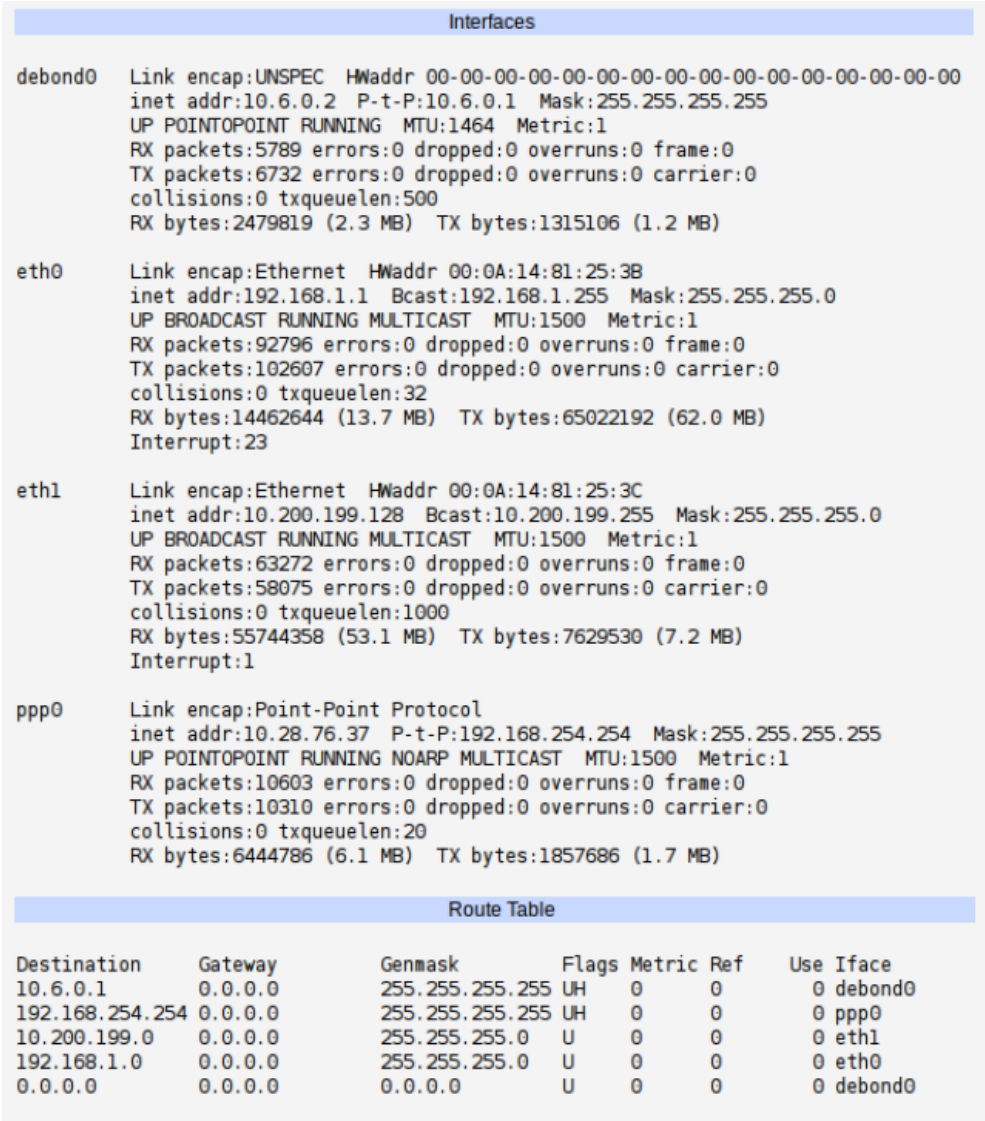

Interfaces

```
debond0   Link encap:UNSPEC  HWaddr 00-00-00-00-00-00-00-00-00-00-00-00-00-00-00-00
          inet addr:10.6.0.2  P-t-P:10.6.0.1  Mask:255.255.255.255
          UP POINTOPOINT RUNNING  MTU:1464  Metric:1
          RX packets:5789 errors:0 dropped:0 overruns:0 frame:0
          TX packets:6732 errors:0 dropped:0 overruns:0 carrier:0
          collisions:0 txqueuelen:500
          RX bytes:2479819 (2.3 MB)  TX bytes:1315106 (1.2 MB)

eth0      Link encap:Ethernet  HWaddr 00:0A:14:81:25:3B
          inet addr:192.168.1.1  Bcast:192.168.1.255  Mask:255.255.255.0
          UP BROADCAST RUNNING MULTICAST  MTU:1500  Metric:1
          RX packets:92796 errors:0 dropped:0 overruns:0 frame:0
          TX packets:102607 errors:0 dropped:0 overruns:0 carrier:0
          collisions:0 txqueuelen:32
          RX bytes:14462644 (13.7 MB)  TX bytes:65022192 (62.0 MB)
          Interrupt:23

eth1      Link encap:Ethernet  HWaddr 00:0A:14:81:25:3C
          inet addr:10.200.199.128  Bcast:10.200.199.255  Mask:255.255.255.0
          UP BROADCAST RUNNING MULTICAST  MTU:1500  Metric:1
          RX packets:63272 errors:0 dropped:0 overruns:0 frame:0
          TX packets:58075 errors:0 dropped:0 overruns:0 carrier:0
          collisions:0 txqueuelen:1000
          RX bytes:55744358 (53.1 MB)  TX bytes:7629530 (7.2 MB)
          Interrupt:1

ppp0      Link encap:Point-Point Protocol
          inet addr:10.28.76.37  P-t-P:192.168.254.254  Mask:255.255.255.255
          UP POINTOPOINT RUNNING NOARP MULTICAST  MTU:1500  Metric:1
          RX packets:10603 errors:0 dropped:0 overruns:0 frame:0
          TX packets:10310 errors:0 dropped:0 overruns:0 carrier:0
          collisions:0 txqueuelen:20
          RX bytes:6444786 (6.1 MB)  TX bytes:1857686 (1.7 MB)
```

Route Table

Destination	Gateway	Genmask	Flags	Metric	Ref	Use	Iface
10.6.0.1	0.0.0.0	255.255.255.255	UH	0	0	0	debond0
192.168.254.254	0.0.0.0	255.255.255.255	UH	0	0	0	ppp0
10.200.199.0	0.0.0.0	255.255.255.0	U	0	0	0	eth1
192.168.1.0	0.0.0.0	255.255.255.0	U	0	0	0	eth0
0.0.0.0	0.0.0.0	0.0.0.0	U	0	0	0	debond0

Figure 3: Network

In the web interface of this user module in the *Status* part is available *Monitoring* item, which allows you to monitor the state of created tunnel and obtain statistical data.

Figure 4: Monitoring

The rows in the figure above are representing channels (routers) in bond. Each channel has upstream (direction from local side to remote) and downstream (opposite direction).

The first channel in the figure above has paused upstream – yellow color (because of its low speed) and failed downstream – red color (packet loss). The second channel is up and running. The length of green bars represents the proportion of the participation of the channel bandwidth on bonded capacity.

4. Troubleshooting

✍ *The traffic is not routed through the bonding tunnel.*

- Check that bonding is enabled on the master (*Enable modem bonding* item).
- Check bonding server IP address, username and password on the master.
- Check that there is a new interface on the *Network* page in the *Interface* section of the router web interface
- Check that default route is set to this interface.
- Check that the bonding server IP address is reachable from the master (ping it).

✍ *Nefunguje DNS na počítačích připojených k routeru typu master.*

- Check that *Up Script* of the master (*Up/Down script* page in router web interface) contains these lines:

```
echo "nameserver 8.8.8.8" > /etc/resolv.conf
echo "nameserver 8.8.4.4" >> /etc/resolv.conf
```

- Connect to the master via SSH and check, that /etc/reslov.conf contains only the following lines (and nothing else). Use `cat /etc/resolv.conf` command.

```
nameserver 8.8.8.8
nameserver 8.8.4.4
```

- Check that DNS server on your computer connected to the master is set to IP address of Master (typically 192.168.1.1).

✍ *Speed of the bonded connection is lower than expected.*

- Check that all slaves are connected in the chain and all are connected to internet (WAN/PPP LED diode is blinking).
- When some slaves are much slower than others, they are not used in a bond, because they would slower down the overall traffic.
- Check that connectivity to your bonding server is fast enough for bonded capacity.
- Download some bigger file (greater than 1 MB) to let the weights of bonded lines to be counted correctly. Do not measure speed of the bond shortly after its creation!

5. Recommended literature

[1] Conel: **Configuration manual for v2 routers**